No.60100-2-02-1

ULVAC

Instruction Manual
for
Direct-Drive Oil Sealed Rotary Vacuum Pump

Model
GLD-136A
GLD-201A

Before using the product, be sure to read this manual.
Keep this manual in a place where it can be referred to at any time and look after it carefully.
The contents of this instruction manual are subject to change without prior notice due to improvements in performance and the functions of the product.

ULVAC KIKO,Inc.

2-7-19 Shin-yokohama, Kohoku-ku, Yokohama City, Kanagawa 222-8522
(3F Tenko Bldg. 50)
Tel: +81-45-474-2011

DOC No.:1117-01-005

Declaration of Conformity

We

Company : ULVAC KIKO,Inc.

Address : 2-7-19 Shinyokohama,Kouhoku-ku,Kanagawa (ZIP Code:222-8522) Japan

declare under our sole responsibility that the products:

Product Name: Oil Sealed Rotary Vacuum Pump

Model No.: GLD-040, GLD-136A, GLD-201A, GLD-280A
GLD-136C, GLD-201B, GLD-280B

to which this declaration relates is in conformity with the following standards or other normative documents

EN 60034(IEC 34 Parts 1)	Rotating electrical machines
EN 1012-2/1996	Compressors and vacuum pumps Safety requirements Part 2: Vacuum pump
UL Std No.1450 (3rd Edition)*	Motor-Operated Air Compressors, Vacuum Pumps, and Painting Equipment

* Single-phase pumps only

following the provisions of

72/23/EEC(amended by 93/68/EEC)	Low Voltage Directive
98/37/EC	Machinery Directive

Subject products are manufactured and tested according to appropriate quality control procedures.

Date : 2006/12/15

Signature : Junichi Aikawa

Junichi Aikawa

Manager of Technical Development Center

0. Introduction

0.1 Before using the vacuum pump

Thank you for purchasing our vacuum pump (hereinafter called “pump”). When you have received the pump, check that the delivered pump is as per your order and that it has not been damaged in transportation, etc.

⚠ Warning

In order to use the pump for as long as possible, read this instruction manual thoroughly before performing installation, operation, inspection and maintenance, and sufficiently understand the cautions for safety, the specifications and operation methods of the pump.

⚠ Note

No part of this instruction manual may be copied for use by a third party without our permission.

0.2 Safety symbols

In this instruction manual and on warning labels attached to the pump, the following symbols are used so that matters which must be strictly adhered to can be readily understood.
These symbols are divided as shown below.

⚠ Danger

When mishandled, there is an imminent danger of the operator suffering a fatal accident or serious injury.

⚠ Warning

When mishandled, there is a possibility of the operator suffering a fatal accident or serious injury.

⚠ Caution

When mishandled, there is a possibility of the operator suffering an injury (light or medium injury) or of damage occurring to property.

⚠ Note

When mishandled, there is a possibility of the pump being damaged or malfunctioning.

Warning

Surface of GLD-201A pump can be more than 90 degrees in case it is continuously operated under high pressure(atmospheric to 10kPa).

Warning

It gets an electric shock touching the motor energizing part. Please work after pulling out the power plug without fail when wires electricity is connected, it checks, and it transfers it.

The Inlet pipe of the pump

The Outlet pipe of the pump

0.3 Cautions for safety

⚠ Danger

This pump is for dry air or the dry nitrogen suck only.

⚠ Warning

Never allow people other than repair engineers to disassemble or repair the pump. Failure to do so may result in ignition or malfunction, leading to injury or electric shock.

⚠ Warning

Connect the earth wire correctly. It is recommended that a dedicated earth leakage breaker should be installed. If the earth wire is not connected, there is a possibility of electric shock occurring in the case of a malfunction or electrical leakage.

⚠ Warning

There is a risk of explosion. Never block the outlet or operate the pump with equipment mounted at the outlet side which blocks the passage of gas. Otherwise, the internal pump pressure increases causing the pump to explode, the oil level gauge to protrude or the motor to be overloaded.
This pump is not resistant to pressure. The internal pump pressure is limited to 0.03 MPa (gauge pressure).

⚠ Warning

Do not use the pump in an explosive atmosphere. Failure to do so will result in injury or fire.

⚠ Caution

Do not insert fingers or objects into the opening of the motor. Doing so may result in electric shock, injury, or fire.

⚠ Caution

Never touch the rotating section of the motor, shaft or coupling while the pump is in operation. Failure to do so will result in injury.

⚠ Caution

Never place combustible materials around the motor or pump. There is a risk of fire.
Also, do not place objects which block ventilation around the motor. Abnormal heat generation may result in burns or fire.

⚠ Caution

Do not touch the motor while the pump is in operation or when the pump is still hot immediately after it stops. Touching it will result in burns.

⚠ Caution

Arrange wires correctly in accordance with the "Electrical Equipment Technical Standard" and "Wiring Regulations." Incorrect wiring may result in fire.

⚠ Caution

If the pump ceases operation or malfunctions, turn off the power switch immediately to prevent accidents, and ask the company from which you purchased the pump or the manufacturer for inspection and repair.

⚠ Note

Do not operate the pump without adding pump oil. If it is operated in an oil-less condition, the pump will be damaged.

0.4 Acceptance and storage of the pump

0.4.1 Acceptance of the pump

Although the pump is delivered with great care, check the following after unpacking.

① The delivered pump is in accordance with your request.

② The specified accessories (enough pump oil to use the pump once; optional equipment) have been provided.

③ No parts have been damaged in transportation.

④ Neither screws nor nuts have become loose nor were lost in transportation.

If there are any problems, contact the company from which you purchased the pump or the sales department of the manufacturer.

0.4.2 Environmental conditions for storage, installation and operation

Since this pump is precisely engineered, ensure that the following conditions be satisfied during storage, installation and operation.

① Ambient temperature, relative humidity: 7°C ~ 40°C, 85% RH or less

② Height above sea level during storage and installation: 1,000 m or less

③ Minimum required distances from the wall, 100mm

④ Other conditions for storage and operation

a) Free from corrosive and explosive gases
b) No condensation
c) Dust-free environment
d) Indoors
e) Do not place pumps on top of each other or place a pump on its side.
f) Not subject to direct sunlight
g) Far from heat sources
h) When you keep it for a long period of time, put pump oil into a pump and seal a suction port with a cap.
i) Don't keep it, where moisture is attracted.

⚠ Caution

Since the pump weighs as much as 20 kg, do not lift or transport it by yourself. Doing so may cause an injury. Please wear safety shoes at the time of work. Perform such work by two people as shown in 3.1 "Installation."

⚠ Note

Do not subject the pump to shocks or place the pump on its side. Doing so may damage the pump.

⚠ Note

For indoors use only.

⚠ Note

When you keep it, without using a pump for a long period of time, please put pump oil into a pump and seal a suction port. Oil is not put into a pump, but if it is kept where a suction port is opened wide, water absorption may expand vanes of a pump and a pump may stop rotating.

⚠ Note

Please do not leave it, where moisture is sucked. If it is left with moisture sucked, since water absorption expansion of vanes and the corrosion of pump parts will be promoted, a pump may stop rotating.

0.5 Protective device

The pump is equipped with a three-phase 200-240 V (50/60 Hz) and 400/460 (50/60 Hz) motor. This pump is not provided with a protective device. Therefore when connecting the motor to the power source, be sure to connect an overload protector.

The installation of an overload protector is obligatory under the "Electric Equipment Technical Standard" (METI Ordinance No. 61, 1965).

This motor incorporates a temperature sensor (PTO : which opens at 150℃) and leader wires are arranged in the terminal box. Use these wires to take out the signal wire.

For the selection of an overload protector, refer to "3.4 Electric wiring."

The use of another protective device (such as an earth leakage breaker) in addition to the overload protector is recommended.

⚠ Caution

1) Be sure to use different power cords for the motor and for taking out a temperature sensor signal.
2) Apply a voltage of 250 V or less to the wire for taking out the temperature sensor signal. Connect a fast-acting an fuse having a capacity of 250 V, 2.5 A between the relay circuit and temperature sensor.

⚠ Note

Use the pump only at the rated voltage. Use at other than the rated voltage will interfere with correct operation of the overload protector, and result in the motor burning out, or fire.

Contents

0. Introduction ····· 01
  0.1 Before using the vacuum pump ····· 01
  0.2 Safety symbols ····· 02
  0.3 Cautions for safety ····· 03
  0.4 Acceptance and storage of the pump ····· 05
    0.4.1 Acceptance of the pump ····· 05
    0.4.2 Environmental conditions for storage, installation and operation ····· 05
  0.5 Protective device ····· 06

1. For Safe Operation ····· 1
  1.1 Hazards peculiar to the pump and safety measures ····· 1
    1.1.1 ⚠ Danger Disposal ····· 1
    1.1.2 ⚠ Warning Electric shock ····· 1
    1.1.3 ⚠ Warning Explosion ····· 1
    1.1.4 ⚠ Caution High temperature ····· 2
  1.2 Material Safety Data Sheet (MSDS) ····· 2

2. Outline of the Pump ····· 3
  2.1 Specification ····· 3
  2.2 Dimensional drawing ····· 4

3. Installation ····· 6
  3.1 Installation ····· 6
  3.2 Lubrication ····· 7
  3.3 Vacuum piping ····· 8
  3.4 Electric wiring ····· 9
  3.5 Fluctuation in the power voltage and frequency ····· 11

4. Operation ····· 13
  4.1 Cautions for operation ····· 13
  4.2 Start of operation ····· 14
  4.3 Stopping the operation ····· 14
  4.4 Operation in cold climates ····· 15
  4.5 Backflow preventer ····· 15
  4.6 Gas ballast valve ····· 16
  4.7 Installation of the oil mist trap (Option) ····· 17
  4.8 Restriction on operation when the oil mist trap is installed ····· 17

5. Pump Performance 18
5.1 Ultimate pressure 18
5.2 Pumping speed 18
5.3 Power requirement 18

6. Maintenance, Installation and Repair 20
6.1 Maintenance 20
6.2 Periodic inspection 20
6.3 Replacement of the pump oil 22
6.4 Replacement of the coupling spider 24
6.5 Trouble check list 25

7. Disposal 27

8. Warranty 27

9. Main Components Replaced during Overhaul 28
9.1 Main replaceable components list 28
9.2 Disassembly drawing 29

Material Safety Data Sheet (MSDS)
Pump Usage Check Sheet (Use this sheet for requesting an overhaul.)

Figures and Tables

Fig. 1 Dimensional drawing of GLD-136A oil sealed rotary vacuum pump ····· 4
Fig. 2 Dimensional drawing of GLD-201A oil sealed rotary vacuum pump ····· 5
Fig. 3 Transportation method of the oil sealed rotary vacuum pump ····· 6
Fig. 4 Lubrication of the oil sealed rotary vacuum pump ····· 7
Fig. 5 Basic piping diagram to the vacuum chamber ····· 8
Fig. 6 Terminal box internal wiring diagram ····· 10
Fig. 7 Electric wiring diagram ····· 10
Fig. 8 Change region of the voltage and frequency ····· 11
Fig. 9 Pumping speed curve ····· 19
Fig. 10 Replacement of the coupling spider ····· 24
Fig. 11 Disassembly drawing of GLD-136A/201A oil sealed rotary vacuum pump ··· 29

Table 1 Specification ····· 3
Table 2 Electric capacity of the motor overload protector ····· 10
Table 3 Specification of the temperature sensor (PTO) ····· 10
Table 4 Periodic inspection table ····· 21
Table 5 Trouble check list ····· 25
Table 6 Main replaceable parts list ····· 28
Attached table: Material Safety Data Sheet for Vacuum Pump Oil SMR-100

1. For Safe Operation

1.1 Hazards peculiar to the pump and safety measures

Before operating or inspecting the pump, read this section carefully to fully understand potential hazards and prevention methods.
The pump is not to be used with toxic of flammable gases.

1.1.1 ⚠ Danger Disposal

Cause		Prevention method and measures
Injury due to touching toxic pump oil in the pump or harmful substances attached to the pump during inspection or disposal	⇒	①Before overhauling and disposing of the pump, ask a waste disposal specialist to make it safe. ② Ask an authorized waste disposal specialist to carry out disposal.

1.1.2 ⚠ Warning Electric shock

Cause		Prevention method and measures
The energized part of the motor was touched.	⇒	① When connecting electric wires, always turn off the power and be sure to connect the earth wire. ② When inspecting and transferring the pump, always turn off the power. ③ Never insert hands, fingers, or thin objects through the motor opening.

⚠ Caution

Do not expose any part of the human body to vacuum.

1.1.3 ⚠ Warning Explosion

Cause		Prevention method and measures
The pressure in the pump increased causing the pump to explode.	⇒	The maximum internal pump pressure is 0.03 MPa (gauge pressure). Measure the pressure at the outlet side and, if the pressure is 0.03 MPa or more (gauge pressure), remove objects which block the passage of gas from the outlet side. When an oil mist trap is adopted, replace or clean it so that it will not block the passage of gas.

1.1.4 ⚠ Caution High temperature

Cause	Prevention method and measures
High temperatures caused burns.	⇒ ① The pump reaches a high temperature during operation. Pump main unit during non-load operation → 32 ~ 65℃ Motor during non-load operation → 22 ~ 55℃ Pump main unit during high-load operation → 52 ~ 85℃ Motor during high-load operation → 32 ~ 65℃ (High-load operation: Operation at a pressure of 1kPa ~ 10kPa) ② If you use the pump in a high ambient temperature and have a high gas throughput, the temperature of the pump-body may exceed 90℃and you must fit suitable guards to prevent contact with hot surfaces. ③ Please be sure to protect and cool surface of GLD-201A pump and away from human body. Use this pump as built-in type. ④ Since the surface temperature is hot, touching the surface accidentally may result in burns. Never touch the pump during operation. When carrying out inspection, wait for 10 minutes until the pump has cooled down completely after it stops.

1.2 Material safety data sheet (MSDS)

The attached “Material Safety Data Sheet (MSDS)” shows chemical materials which may be used or touched when operating the pump. Read the MSDS carefully in order to understand the harmful properties of these materials.
Contact us before using chemical materials (vacuum pump oil) other than those mentioned in this instruction manual.

⚠ Caution

MSDS is submitted as reference information to ensure safe handling of hazardous and harmful materials. Personnel handling the pump oil should be aware that proper measures must be taken depending on the conditions of use as their responsibility. Keep in mind that the MSDS itself is not a warranty for safety.

2. Outline of the Pump

2.1 Specification

This oil sealed rotary vacuum pump is a rotary vane pump (hereinafter called Gaede type pump) in which the pump is directly driven by the motor. Since the pump is small, light, and quite simply constructed, it is easily maintained and repaired.

Table 1 Specification

Model		Unit	GLD-136A		GLD-201A	
			50 Hz	60 Hz	50 Hz	60 Hz
Type			Rotary vane (2 vanes)			
Pumping speed		L/min	136	162	200	240
Ultimate pressure	G.V. close	Pa	6.7×10^{-2}			
	G.V. open		6.7			
Motor	Type		3-phase, 400W, 4 poles, fully-closed external fan		3-phase, 550W, 4 poles, fully-closed external fan	
	Voltage	V	200-240/ 380-415	200-240/ 380-460	200-240/ 380-415	200-240/ 380-460
Full-load current		A	2.60 (200 V) 2.60 (220 V) 2.80 (230 V) 3.00 (240 V) 1.50 (380 V) 1.60 (400 V) 1.70 (415 V)	2.30 (200 V) 2.20 (220 V) 2.20 (230 V) 2.30 (240 V) 1.30 (380 V) 1.30 (400 V) 1.35 (440 V) 1.40 (460 V)	3.40 (200 V) 3.60 (220 V) 4.00 (230 V) 4.20 (240 V) 2.10 (380 V) 2.30 (400 V) 2.40 (415 V)	3.00 (200 V) 3.20 (220 V) 3.20 (230 V) 3.20 (240 V) 1.80 (380 V) 1.80 (400 V) 1.90 (440 V) 2.10 (460 V)
Revolution		r/min	1440 (200 V) 1450 (220 V) 1460 (230 V) 1460 (240 V) 1450 (380 V) 1460 (400 V) 1460 (415 V)	1730 (200 V) 1740 (220 V) 1750 (230 V) 1760 (240 V) 1740 (380 V) 1750 (400 V) 1760 (440 V) 1760 (460 V)	1440 (200 V) 1450 (220 V) 1460 (230 V) 1460 (240 V) 1450 (380 V) 1460 (400 V) 1460 (415 V)	1730 (200 V) 1740 (220 V) 1750 (230 V) 1750 (240 V) 1740 (380 V) 1750 (400 V) 1760 (440 V) 1760 (460 V)
Oil	Standard oil		SMR-100			
	Oil amount	mL	1,000		1,100	
Weight		kg	24		27	
Ambient temperature range		℃	7 ～ 40 (If the oil temperature is 7℃ or less, operation start-up may be difficult.)			
Noise level		dB (A)	57 or less(Ultimate pressure at 1m)			
Inlet pipe diameter		-	KF-25 (NW-25)			
Max. size		mm	170(W)×488(L)×240(H)		170(W)×516(L)×240(H)	
Leak rate		$Pa\cdot m^3/sec$	1×10^{-6}			

Note 1: The ultimate pressure values in the above table are indicated by a McLeod gauge. A Pirani gauge shows values approximately one magnitude higher than those shown by the McLeod gauge.

Note 2: Vacuum pump oils have different steam pressures, viscosities, and oil properties depending on the type. Always use the oil sealed rotary vacuum pump oil specified by us. The use of other oils will affect the pump's performance.
Specified oil: SMR-100

Note 3: "G.V." is an abbreviation for gas ballast valve.

Note 4: The motor voltage is switched between 200V and 400V by changing the wire connection in the terminal box.

2.2 Dimensional drawing

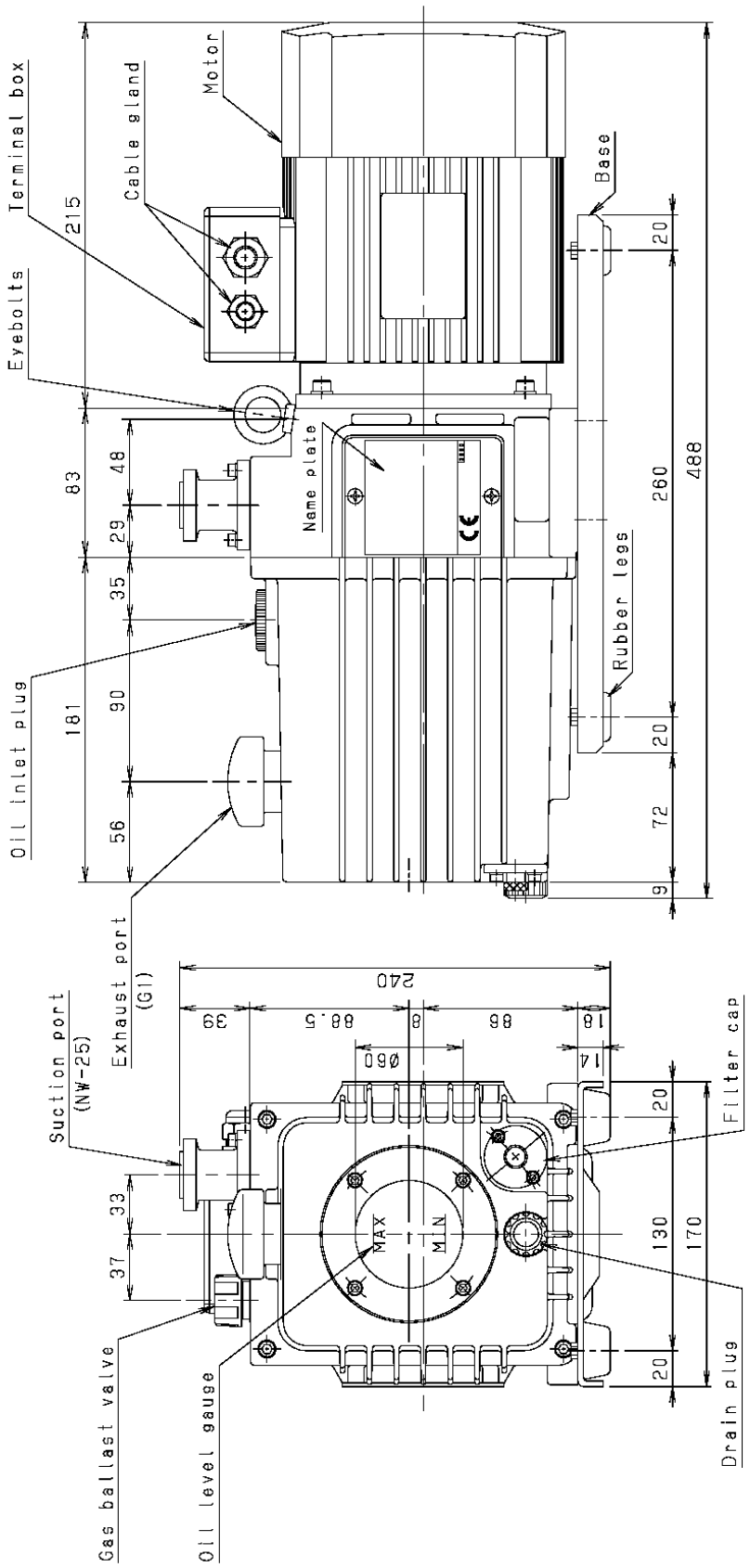

Fig. 1 Dimensional drawing of GLD-136A oil sealed rotary vacuum pump

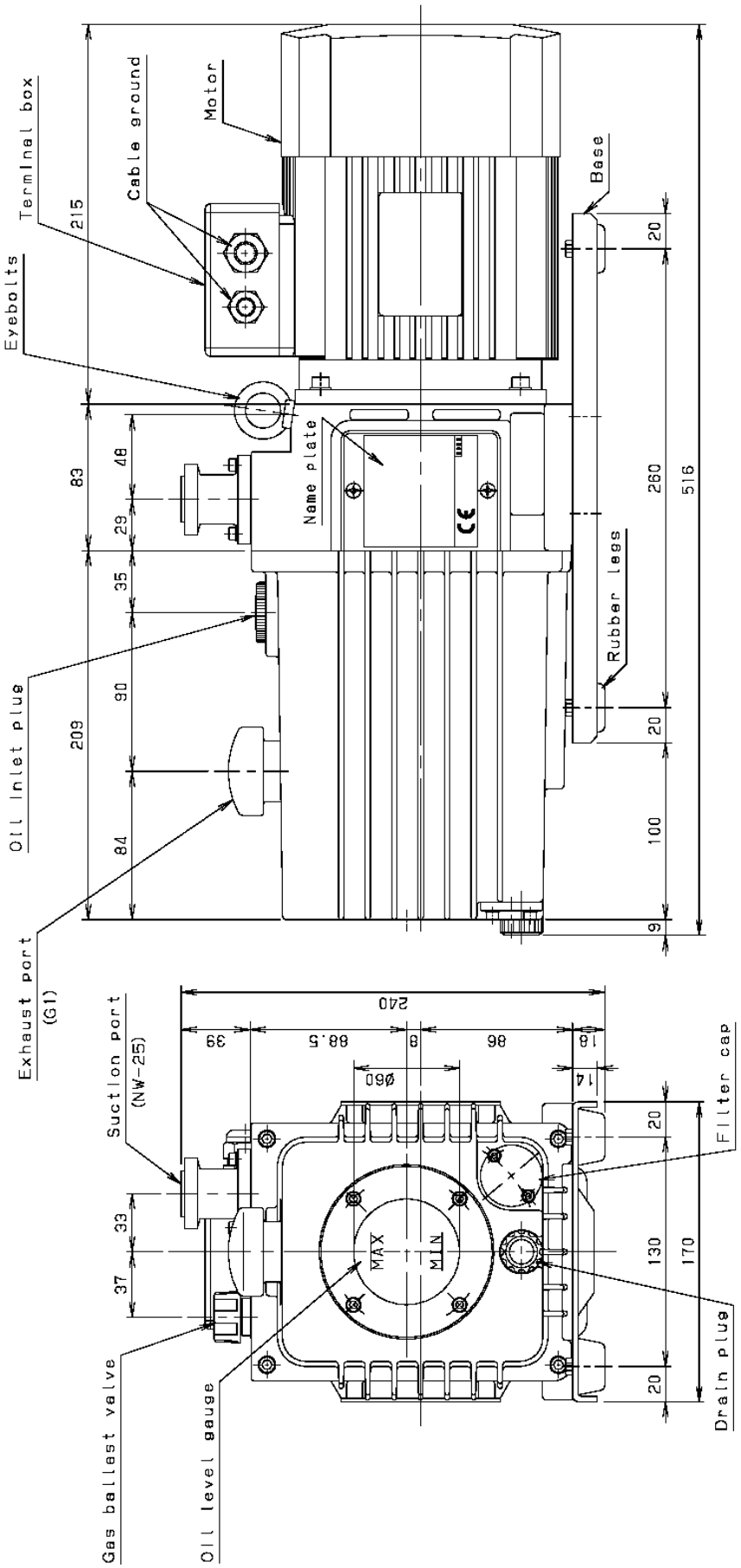

Fig. 2 Dimensional drawing of GLD-201A oil sealed rotary vacuum pump

3. Installation

3.1 Installation

The pump should be installed on a level surface in a location with minimal dust, dirt and humidity and be arranged with consideration given to ease of installation, removal, inspection and cleaning.
Particular attention should be paid to the ambient temperature when building the pump into equipment. Use a rubber vibration isolator to separate the pump from other equipment and to isolate the pump from the vibrations of other equipment. See "0.4.2 Environmental conditions for installation, storage and operation" for details.

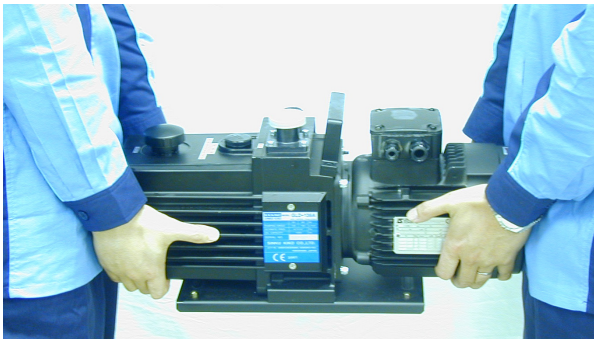

Fig. 3 Transportation method of the oil sealed rotary vacuum pump

⚠ Caution

Since the pump weighs as much as 20 kg, do not lift or transport it by yourself. Doing so may cause an injury. Always carry out work with two people as shown in Fig. 3.

⚠ Caution

Minimum required distances from the wall, 100mm.

⚠ Note

If the pump is operated whilst it is tilted, placed on its side or upside-down, the pump will be damaged. Install the pump level with the inlet facing up as shown in Fig. 1.2.

⚠ Caution

Keep strictly to the followings if you install the pump with eyebolts.
① You must not use eyebolts if it exceed the pump in weight.
② Surely check out wear and bend of eyebolts before using.
Don't use them if you find them deformation.
③ Sling the pump up slowly. It is dangerous to sling up rapidly.
④ Keep strictly to an angle of 60 degrees at wires when you sling it up.

3.2 Lubrication

Remove the lubrication plug from the lubrication port, and add the pump oil which has been delivered together with the pump or the pump oil specified by us (SMR-100) up to the range marked with the red line on the oil level gauge. When making the first lubrication, add oil near to the upper oil level limit shown on the oil level gauge. After lubrication, mount the lubrication plug to the pump (see Fig. 4).

Always keep the oil level of the pump within the oil limit range shown on the oil level gauge during operation. If the amount of oil is incorrect, the performance of the pump will deteriorate resulting in the malfunctioning of the pump. When the amount of oil has reduced and the oil level has reached an area below the lower red line which shows the lower limit on the oil level gauge such that the level cannot be seen, the ultimate pressure increases and exhausting sound may not cease.

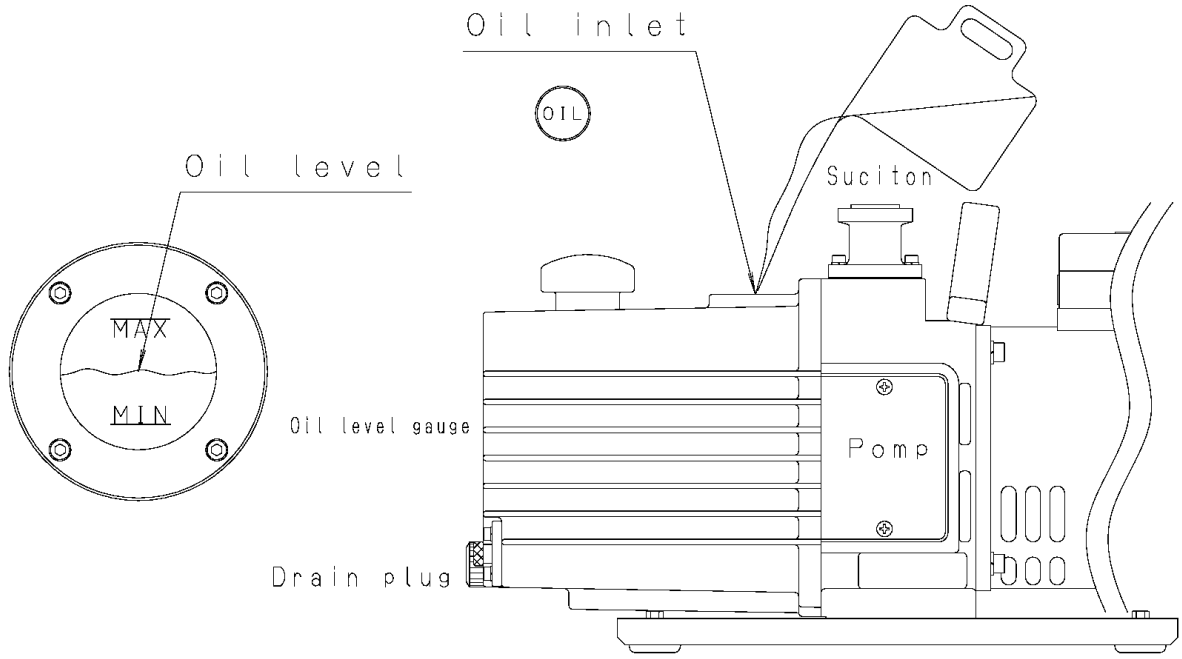

(1) Oil level shown on the oil level gauge (2) Lubrication method

Fig. 4 Lubrication of the oil sealed rotary vacuum pump

⚠ Caution

① Wear protective equipment such as rubber gloves and safety goggles.

② Be sure to read the attached "Material Safety Data Sheet" before adding oil. If the oil accidentally comes into contact with your hands or enters your eyes, take proper measures in accordance with the section "First-aid treatment" shown in "Material Safety Data Sheet."

⚠ Note

Use only oils specified by us. If other oils are used, the pump performance will deteriorate or its life will be shortened.

3.3 Vacuum piping

(1) Before connecting the pipe to the pump, clean the inner walls of the vacuum chamber, piping and vacuum valve to completely eliminate moisture, fine particles, dust, dirt and rust.

⚠ Note

If fine particles, dust or dirt, etc are evacuated, the pump may malfunction. If moisture is evacuated, not only does the ultimate pressure increase but also the inside of the pump becomes rusty causing the pump to malfunction.

(2) Mount vacuum valve (A) and leak valve (B) between the vacuum chamber and pump as shown in Fig. 5.

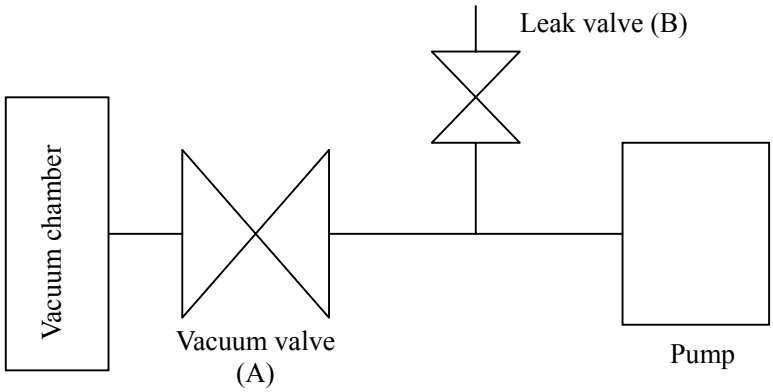

Fig. 5 Basic piping diagram to the vacuum chamber

(3) Use a KF-25 (NW-25) flange for the connection to the inlet pipe.

⚠ Note

The wire mesh in the inlet pipe has been adopted to prevent foreign matter from entering the pump. Do not remove the wire mesh.

3.4 Electric wiring

(1) The pump rotates in the clockwise direction as seen from the front of the pump (level gauge side).
(2) When wiring, open the terminal box of the motor and connect the wires as shown in Figs. 6 and 7.
(3) Use a power cord having a diameter of ϕ 1.5mm.
(4) If wires are connected as shown in Figs. 6 and 7, the pump rotates clockwise as seen from the front of the pump (level gauge side). If the pump rotates in the opposite direction, turn off the power immediately, exchange the wires connected to the U-phase and V-phase, rotate the pump again and check that the pump rotates in the correct direction.
(5) In order to prevent the motor from burning due to an overcurrent, install an overload protector (Table 2) for the electric wiring.
(6) The screw of the earth terminal at the motor side is provided with an "earth mark" in the terminal box.
(7) Use power cords of the same diameter for the motor and earth.
(8) This motor incorporates a temperature sensor (PTO : which opens at 150℃) and leader wires are arranged in the terminal box. Use these wires to take out the signal wire. Connect the temperature sensor (PT0) as shown in Fig. 7. The specifications of the temperature sensor are shown in Table 3.
(9) The larger cable gland is for wires having a diameter of ϕ 8 to ϕ 13, and the smaller one is for wires having a diameter of ϕ 5 to ϕ 8. Use a cable gland that is suitable for the size of the power cord to be used.

⚠ Warning

If the pump is directly (and permanently) connected to the host equipment then the end-user has to provide adequate disconnection device.

⚠ Note

GROUNDING INSTRUCTIONS
In the event of an electrical short circuit, grounding reduces the risk of electric shock by providing an escape wire for the electric current. This pump is equipped with a cord having a grounding wire with an appropriate grounding plug. The plug must be plugged into an outlet that is properly installed and grounded in accordance with all local codes and ordinances. If power code is not equipped (option) then appropriate grounding shall be provided upon installation.

⚠ Warning

Improper installation of the grounding plug is able to result in a risk of electric shock. When repair or replacement of the cord or plug is required, do not connect the grounding wire to either flat blade terminal. The wire with insulation having an outer surface that is green with or without yellow stripes is the grounding wire.

⚠ Note

Check with a qualified electrician or serviceman when the grounding instructions are not completely understood, or when in doubt as to whether the product is properly grounded. Do not modify the plug provided; if it does not fit the outlet, have the proper outlet installed by a qualified electrician.

⚠ Note

This pump must be connected to a grounded, metallic, permanent wiring system, or an equipment-grounding terminal or lead on the product.

⚠ Warning

Protection device against overheat must be installed for the Pump Unit according Fig.7 .The installed disconnecting device (e.g.relay) must comply with the relevant EN/IEC standards and must have adequate interrupting capacity to disconnect the pump from the supply in case overheating occurs.

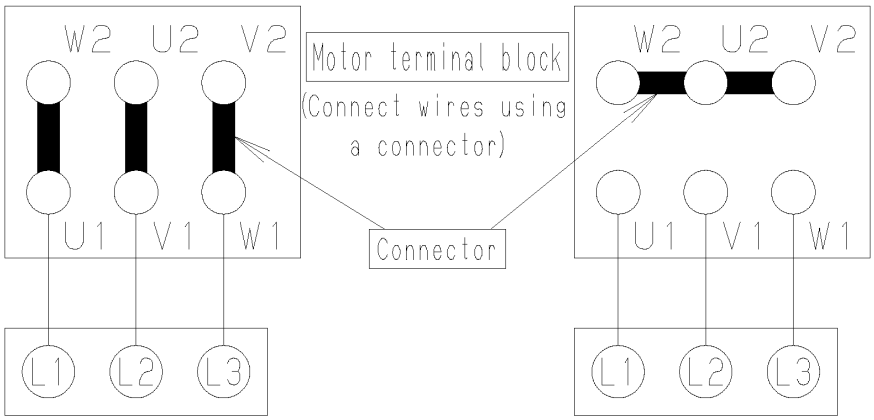

3-phase, 200V power source　　3-phase, 400V power source

Fig. 6 Terminal box internal wiring diagram

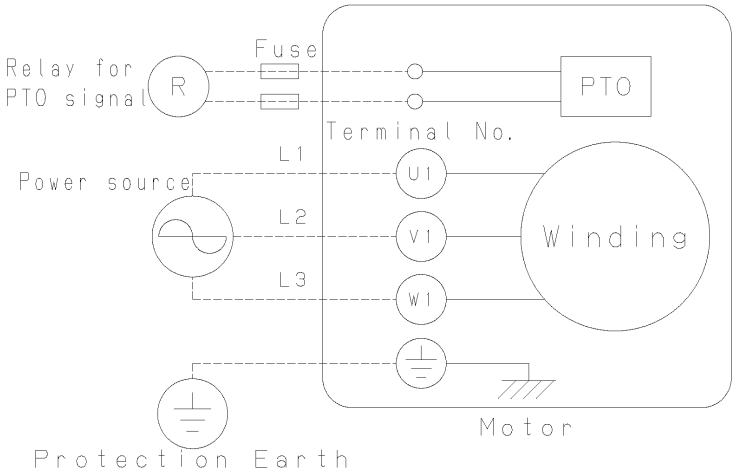

Fig. 7 Electric wiring diagram

Table 2 Electric capacity of the motor overload protector

Motor output (W)	Set value for thermal relay of electromagnetic switch (A)	Motor breaker (A)
400	Rated current of the motor (Marked on the motor nameplate.)	Rated current of the motor (Marked on the motor nameplate.)
550	Rated current of the motor (Marked on the motor nameplate.)	Rated current of the motor (Marked on the motor nameplate.)

Table 3 Specification of the temperature sensor (PTO)

Type	Operating Principle	Operating Curve	Cut-off(A)
Normally closed thermostat PTO	Bimetallic strip, indirectly heated, with normally closed (N/C) contact 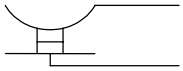	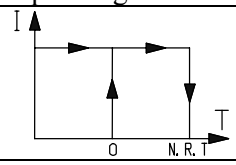	2.5A at 250V with cos ϕ 0.4

N.R.T.: Nominal running temperature of the PTO

3.5 Fluctuations in the power voltage and frequency

Standard: Rotation electricity machine general rules

JIS C 4034-1:1999, JEC-2137-2000

To the voltage change and frequency change in Domain A, in main rated values, it operates continuously, and can be used practically convenient, and to the voltage change and frequency change in Domain B, it shall operate with main rated values and shall be used practically convenient.

However, operation with "it is convenient and safe is maintained on "practical use, it means not resulting in the grade which shortens a life remarkably, and the characteristic, a temperature rise, etc. do not apply correspondingly in the state of rating. Moreover, main rating shows rated torque (N·m).

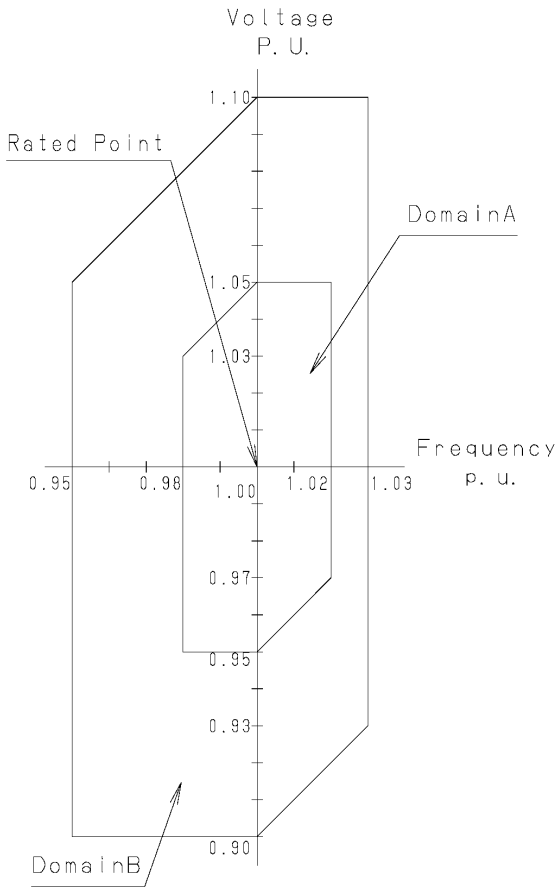

Fig. 8 Change region of the voltage and frequency

⚠ Warning

Before connecting wires, turn off the power switch. Never perform wiring with the power supplied as an electric shock will occur. Connect the earth wire correctly. Failure to do so may result in electric shock if a failure or earth leakage occurs. Installation of a dedicated earth leakage breaker is also recommended.

⚠ Caution

Perform electric wiring correctly in accordance with the "Electric Equipment Technical Standard" and "Internal Wiring Regulation." Incorrect wiring will result in fire.

⚠ Caution

Install an overload protector suitable for the capacity of the motor. If an overload protector is not installed, or if an overload protector that is unsuitable for the motor capacity is installed, the motor will be damaged leading to fire.

⚠ Caution

1) Be sure to use different power cords for the motor and for taking out a temperature sensor signal.
2) Apply a voltage of 250 V or less to the wire for taking out the temperature sensor signal. Connect a fast-acting an fuse having a capacity of 250 V, 2.5 A between the relay circuit and temperature sensor.

4. Operation

4.1 Cautions for operation

⚠ Warning

There is a risk of explosion. Never block the outlet or operate the pump with equipment mounted at the outlet side which blocks the passage of gas. Otherwise, the pump internal pressure increases causing the pump to explode, the oil level gauge to protrude or the motor to be overloaded.
This pump is not resistant to pressure. The internal pump pressure is limited to 0.03 MPa (gauge pressure).

⚠ Note

① In the process of manufacturing semiconductors, pump oil may deteriorate over a very short period of time. It is recommended that the pump oil should be replaced within 10 days after starting use of the pump, and the replacement frequency of the pump oil should be decided based on the contamination level of the pump oil.

② If the pump evacuate a lot of moisture, replace the oil frequently. If the pump is used with gas which contains a lot of moisture, water absorption expands the vanes of the pump, the lubricity of the pump oil deteriorates and corrosion of the pump's components advance, causing the pump to malfunction.

③ If chemicals including acid has been evacuated, the pump may become rusty while it is not being operated (i.e. overnight), making operation impossible. If such chemicals are evacuated, replace the pump oil immediately.

④ Solvents which deteriorate the lubricity of the pump oil will cause scoring, etc. If such a solvent is evacuated, replace the oil.

⑤ If operation is performed continuously at a high evacuation pressure of 10 kPa or more, a large amount of pump oil is consumed, causing a shortage of oil and insufficient lubrication of the pump. If such a condition continues, components will rapidly wear and become scored. Avoid continuous operation at a high evacuation pressure as much as possible and, without fail, add pump oil.

⑥ Do not block the flow of air to the motor fan as the temperature of the motor and pump will increase.

4.2 Start of operation

To start operation, close leak valve (B), open vacuum valve (A) to the inlet port, and turn on the power switch. Then the pump starts beings to exhaust (see Fig. 5).

⚠ Caution

① The motor and pump become hot (temperature increase under non-load operation: 25℃, temperature increase under high-load operation: 45℃) during operation of the pump. There is a risk of burns. Never touch the motor or pump during operation.

② If operation is performed at high pressure, oil mist is generated at the exhaust side. Install an oil mist trap or connect a duct to discharge the oil mist outside the room. Or, install a ventilator.

⚠ Note

When the pump does not rotate correctly, take the following measures.

a) Check the amount of oil, and adjust if necessary.

b) In an environment where the ambient temperature is low, if the pump is left unused for a long time (three days or longer), the pump oil enters the cylinder. (This phenomena cannot be avoided even if the pump pressure is released to atmospheric pressure after last using the pump.) If the pump is restarted in this condition, an overload is applied to the pump and the overload protector may actuate. In such a case, turn the pump on and off several times in short intervals.

⚠ Note

The oil temperature in the pump increases to 32 ～ 85℃ if operation continues for several hours. If the oil temperature exceeds this range, there is a possibility of the pump malfunctioning. Check the pump or contact us.

4.3 Stopping the operation

To stop operation, close vacuum valve (A), open leak valve (B) quickly, and turn the power switch off (see Fig. 5).

Please close a leak valve (B) and seal a suction side as much as possible, after making a suction side into atmospheric pressure.

⚠ Caution

The motor and pump become hot (temperature increase under non-load operation: 25℃, temperature increase under high-load operation: 45℃) during operation. There is a risk of burns. Never touch the motor or pump until they have cooled down completely after the pump is stopped.

4.4 Operation in cold climates

When using the pump in winter, in cold climates, or outdoors, it is sometimes difficult to start the pump. This is an overload phenomenon resulting from the increase in the viscosity of the pump oil. To start the pump in such conditions, warm up the pump oil, or turn the pump on and off several times in short intervals.

When the pump stops after rotating for a few seconds, open leak valve (B) and continuous operation may become possible. After the pump has warmed up, close leak valve (B) and return to ordinary operation.

4.5 Backflow preventer

A backflow preventer is incorporated into the pump to prevent the oil from flowing back while the pump is stopped.

The backflow preventer actuates in the case of an emergency including power failure. So, after the pump is stopped due to a power failure, follow the procedures mentioned in "4.3 Stopping the operation" to stop the operation.

⚠ Note

① To stop the pump, always close vacuum valve (A) and then open leak valve (B). If this procedure is neglected, the pump oil fills the cylinder, making restart difficult or causing damage to the pump. The pump oil also may flow back to the vacuum chamber side.

② If vacuum valve (A) is not closed, air may leak into the device side through the pump increasing the pressure.

4.6 Gas ballast valve

The pump is equipped with a gas ballast valve in order to evacuate vapor and condensable gases such as solvent vapor.

Evacuated condensable gas that liquefies in the compression and pressurization processes of the pump is mixed with the pump oil and starts circulating through the pump together with the oil. In such a case, the same effect as when oil of a high steam pressure is used is produced, and the ultimate pressure of the pump increases. Moreover, the lubricity of oil deteriorates and the service life of the shaft seal is shortened.

If air or dry nitrogen enters through the gas ballast valve just before the compression and pressurization processes of the pump, condensable gas will not liquefy and will be exhausted together with air through the outlet valve. When the gas ballast valve is used, the "gas ballast effect" increases as the pump temperature becomes high. So, before evacuating condensable gas, perform operation for approximately 20 minutes with the gas ballast open, and after the pump temperature reaches approximately 50 ～ 65℃, open vacuum valve (A) and continue operation. If the temperature is low, a satisfactory "gas ballast effect" is not achieved.

If the gas ballast valve is left open when condensable gas is not evacuated, not only does the pump oil scatter and power is lost, but also the ultimate pressure increases. Furthermore, since the gas ballast valve's capacity to process condensable gas is limited, condensable gas remains in the pump oil when a lot of condensable gas is exhausted or when condensable gas (air and gas containing small amounts of moisture and other vapor which make the oil dirty) is exhausted without opening the gas ballast valve. In such a case, perform non-load operation with vacuum valve (A) closed and the gas ballast valve open. Then the oil temperature increases and the pump oil is purified due to the effect of the gas ballast valve. Continue non-load operation with the gas ballast valve closed until the specified pressure is reached. If the pump oil is not cleaned even a long time, replace the pump oil.

⚠ Caution

The vacuum pump becomes hot (temperature increase under non-load operation: 25℃, temperature increase under high-load operation: 45℃) during operation. Do not touch any section other than the valve while the gas ballast valve is in operation.
When starting operation, be sure to close the gas ballast valve.

⚠ Note

If the gas ballast valve is left open without condensable gas being exhausted, the pump oil scatters, power is lost, or the ultimate pressure increases. Close the gas ballast valve when condensable gas is not exhausted.

4.7 Installation of the oil mist trap (Option)

An oil mist trap can be installed in order to remove oil mist from the pump. As such an oil mist trap, models OMT-200A and OMI-200 are available. Remove the standard outlet pipe from the outlet port of the pump and install an oil mist trap instead. The oil mist trap not only prevents oil mist generation but also reduces exhaust noise by half.

For details, refer to the instruction manual for the oil mist trap.

4.8 Restriction on operation when the oil mist trap is installed

When using the oil mist trap, there are some restrictions on operation. When the filter is clogged, replace it.

The internal pump pressure is limited to 0.03 MPa (gauge pressure). When the pressure measured at the outlet side has reached 0.03 MPa (gauge pressure), replace the oil mist trap filter.

⚠ Warning

Be sure to observe the restrictions on operation when the oil mist trap is installed. There is a risk of explosion. When the filter is clogged, replace it.

5. Pump Performance

5.1 Ultimate pressure

The term “ultimate pressure” as employed in the catalogue and in this manual is defined as “the minimum pressure obtained by the pump without the introduction of gas from the pump inlet (i.e. the non-load condition).” For this pump, measurement is performed using the specified pump oil with only a Pirani vacuum gauge installed at the pump inlet port.

Note that the Pirani gauge shows values approximately five to ten times higher than those shown by the McLeod gauge. This is because condensable gas components (mainly moisture) included in the measured air are removed when the McLeod gauge is used.

Also, the actual ultimate pressure of the vacuum device becomes higher than that noted in the catalogue for the following reasons.

① The vacuum gauge is installed at a distance from the pump, and the steam and a variety of gases are generated by water droplets and rust on the inside walls of the pump and piping.

② Gasifying of volatile components which have dissolved in the pump oil. (Deterioration of pump oil)

③ Existence of a gas supply source including vacuum leakage in the vacuum path.

5.2 Pumping speed

The pumping speed of the pump depends on the type and pressure of the gas to be evacuated. The pumping speed usually reaches the maximum at a high pressure range, and it gradually decreases as the pressure reduces.

The nominal pumping speed of this pump is the maximum pumping speed when dry air is evacuated. Fig. 9 shows the relationship between the evacuation pressure and pumping speed.

5.3 Power requirement

The power required to operate the pump is the total of the power required to overcome the rotational resistance of the pump (mechanical work) and the power required to compress the air (compression work), and reaches a maximum at an inlet evacuation pressure of around 2.7×10^4 to 4×10^4 Pa. If the inlet evacuation pressure has reduced to 13.3 Pa or less, the compression work is considerably reduced and more power is consumed in mechanical work.

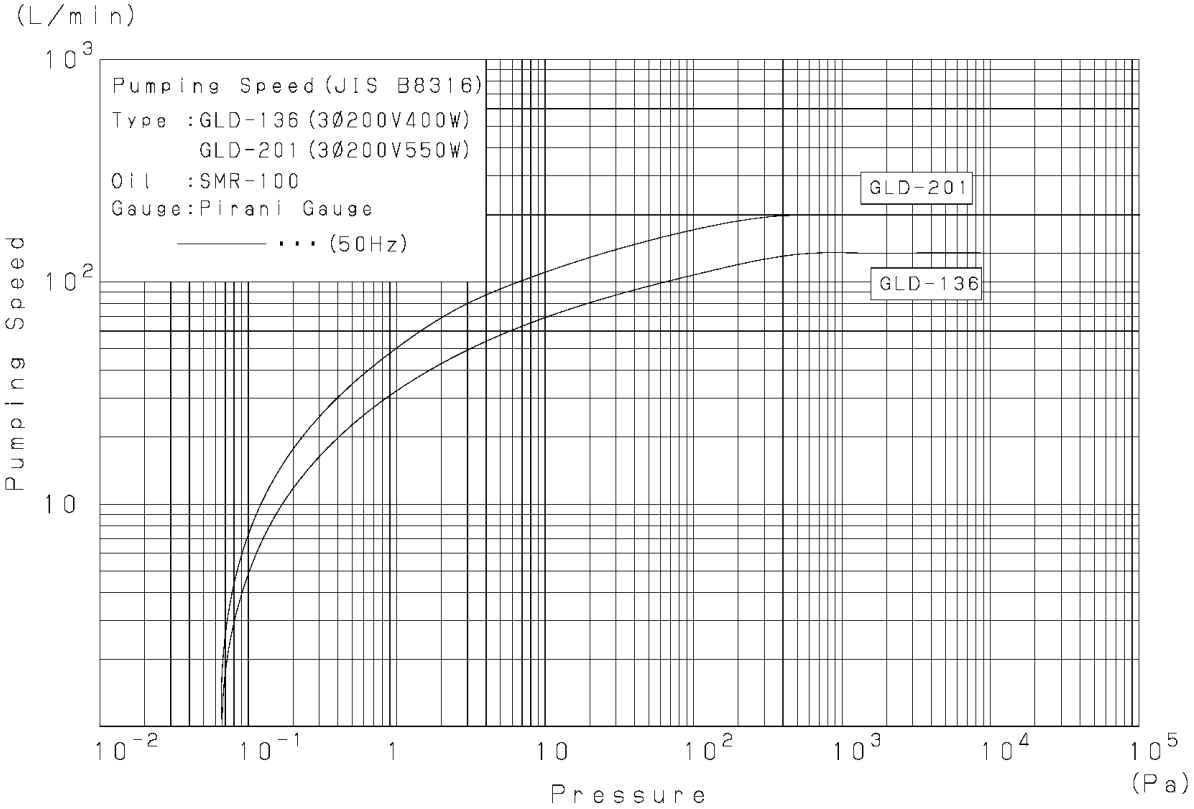

Fig. 9 Pumping speed curve

6. Maintenance, Inspection and Repair

6.1 Maintenance

Check the following during operation at least once every three days.

(1) Amount of pump oil (To be within the range shown with red lines on the oil level gauge)
(2) Discoloration of the pump oil
(3) Abnormal sound
(4) Problem with the motor current value
(5) Oil leak from the oil seal

If there is any problem, take proper measures in accordance with "6.5 Trouble check list."

6.2 Periodic inspection

The items to be checked should be changed as necessary depending on the environment where the pump is used. However, always check the following in order to prevent a malfunction and to lengthen the service life of the pump.

⚠ Caution

① Pulled out the power plug or turn off the disconnecting device before starting inspection and do not turn it on while inspection is in progress. Doing so will result in injury.

② The pump is very hot immediately after it is stopped. Wait for 10 minutes until the pump has cooled down completely and then start inspection. There is a risk of burns.

1) Periodic replacement of the pump oil

The pump oil deteriorates with operation. Check the viscosity and level of contamination of the pump oil with the oil level gauge, and replace the pump oil in good time. If the pump oil is replaced periodically, the deterioration of the pump oil is minimized and the service life of the pump is lengthened.

If operation is continued with a lot of moisture mixed with the pump oil, the ultimate pressure will not reach the standard value, the movement at the section where the mechanical friction is generated becomes slow, and the pump finally becomes damaged. Replace the pump oil in accordance with "6.3 Replacement of the pump oil."

Table 4 Periodic inspection table

Frequency	Item	Details	Measures
Once/3 days	Oil	Amount	Refill the oil.
		Color (Reddish brown, dark blown, and cloudy white are not good.)	Replace the oil.
	Sound	Abnormal sound	Check nuts and bolts for looseness. If not clear, contact us.
	Vibration	Abnormal vibration	
	Current value	Difference from the rated value	Check the cause of an overload. If not clear, contact us.
Once/week	Surface temperature	Surface temperature (The temperature higher than the room temperature by 50℃ or more is abnormal.)	Check the cause of an overload. If not clear, contact us.
	Oil leakage	Oil leakage from the shaft seal section and plugs.	Replace seals, or contact us.
Once/3,000 operation hours or once/6 months	Evacuation wire mesh	Clogged with dust	Clean the wire mesh.
	Oil	Even if no problem is recognized, be sure to replace the oil.	Replace the oil.
Once/year	Spider	Damage or fracture	Replace the spider.

2) Inspection of the amount of pump oil
   Refill the pump oil so that the pump oil level is kept within the range of the red lines showing the upper and lower limits on the oil level gauge during operation.

3) Inspection of oil leakage
   When oil leaks from the shaft seal section or drain plug seal section, repair is required. Our specified O-rings and seals are always available from the service departments shown at the back of this manual. When necessary, contact them.

4) Inspection of evacuation wire mesh
   If the wire mesh is clogged with dust included in the evacuated gas, the pump's efficiency may deteriorate.

5) Inspection of abnormal sounds and vibration
   Check the nuts and bolts for looseness.

6) Inspection of the coupling spider
Check the spider of the coupling which connects the main pump unit and motor of the pump for damage. If cracks or fractures are found on the spider, replace it in accordance with "6.4 Replacement of the coupling spider."

7) Inspection of the oil mist trap
When using the oil mist trap in replacement of the standard outlet pipe, pay attention to the clogging of the filter in the oil mist trap. If the clogging advances, evacuated gas cannot be exhausted any longer, which causes the oil gauge to protrude and oil leakage from the shaft seal section or drain plug seal section. The maximum internal pump pressure is 0.03 MPa (gauge pressure).

When the pump is operated continuously for a long time or when the pump is extremely contaminated with evacuated gas, overhaul is required. Contact the nearest sales or service department among those listed at the back of this manual.

⚠ Danger

When requesting the manufacturer's service department to overhaul the pump, always write the type of the vacuumed gas on the "Pump Usage Check Sheet" attached at the back of this manual and submit it. Note that if toxic gases are exhausted, both the pump itself and pump oil will become contaminated. Please be sufficiently aware that use with some gases will preclude overhaul.

6.3 Replacement of the pump oil

The pressure of the vacuum device may increase due to the deterioration of the pump oil. In such a case, close the inlet port of the pump and check that the specified ultimate pressure has been reached. If not, replace the pump oil. If substances having a high vapor pressure (such as moisture or solvents) are mixed with the pump oil, or if sludge is accumulated at the bottom of the pump, the ultimate pressure cannot be reached with only one replacement and the pump oil must be replaced several times. The deterioration of the pump oil is caused not only by the contamination due to evacuated gas but also by the changes in the properties of the pump oil itself (depending on the operation time). Periodic replacement in accordance with Table 4 showing an oil replacement guide is recommended.

⚠ Danger

Keep in mind that if the pump was used in accordance with its exhausting toxic gas, both the pump unit and pump oil might become contaminated.

⚠ Caution

① Wear protective equipment such as rubber gloves and safety goggles.

② Be sure to read the attached "Material Data Sheet" before adding oil. If the oil accidentally comes into contact with your hands or enters your eyes, take proper measures in accordance with the section "First-aid treatment" shown in "Material Safety Data Sheet."

⚠ Note

Use only oils specified by us. If other oils are used, the pump performance will deteriorate or its life will shorten.

< Pump oil replacement procedure >

(1) Release the pump inlet pipe to the atmosphere and operate the pump for five seconds. The oil remaining in the pump is discharged efficiently.
(2) Remove the outlet pipe and drain plug to discharge the pump oil.
(3) Mount the drain plug, and add the required amount of the new specified pump oil through the lubrication port (see Fig. 4).
(4) If the pump oil is contaminated extremely, add new pump oil and perform operation for a while (several minutes) to clean the pump. Repeat this a few times.
(5) After replacing with the new pump oil, operate the pump and when the pump has become warm, check the ultimate pressure.
(6) If the pump oil is so dirty that oil sludge accumulates at the bottom of the pump, the specified ultimate pressure even after the pump oil is replaced. In such a case, overhaul the pump.

6.4 Replacement of the coupling spider

A rubber spider is used at the section connecting the pump main unit and the motor. It is recommended that this spider be periodically inspected once a year or so. If the corner is chipped or cracked, replace it. If the pump is started and stopped hundreds of times a day, increase the inspection frequency.

To take out the spider, remove the four bolts which fix the motor to the pump main unit, and remove the motor. Then the coupling can be removed and the spider taken out. After inspecting the spider, mount the spider to either of the two coupling, and adjust the position so that both claws of the couplings are engaged with each other as shown in Fig. 10.

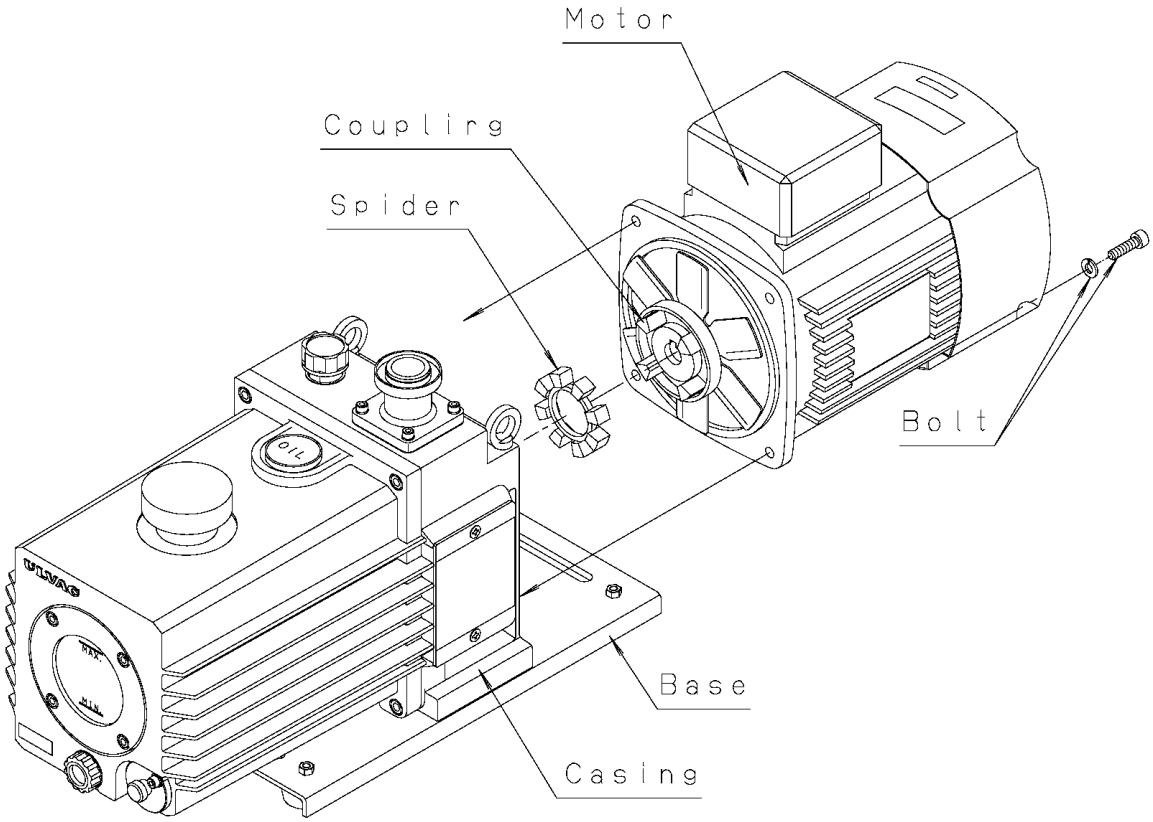

Fig. 10 Replacement of the coupling spider

Connect the concave section (female) of the pump unit with the convex section (male) of the motor, push the motor into the pump so that both connecting surfaces come completely into contact with each other, and fix the motor with bolts.

6.5 Trouble check list

Table 5 Trouble check list

Problem	Cause	Measures	Reference
The pump does not rotate.	①The pump is not connected to the power supply.	①Connect the pump to the power supply.	3.4
	②The power switch is not turned on.	②Turn on the power switch.	4.2
	③Problem with power supply voltage	③Set the power supply voltage to within ±10% of the rated voltage.	3.5
	④The overload protector has actuated.	④Press the reset button.	
	⑤The motor malfunctions.	⑤Replace the motor.	
	⑥Low ambient temperature has increased the oil viscosity.	⑥Increase the ambient temperature to 7℃ or more.	4.4
	⑦The entrance of foreign matter into the pump caused the rotor to burn out.	⑦Overhaul (replace the cylinder and rotor).	6.2
	⑧Moisture or solvents were sucked in, forming rust inside the pump.	⑧Overhaul (replace the cylinder and rotor).	6.2
	⑨Reaction product accumulated in the pump when the pump stops after exhausting reactive gas.	⑨Overhaul (clean the pump inside and remove reaction products).	
	⑩Water absorption expands the vanes.	⑩Overhaul (replace the vanes)	
	⑪Components inside the pump have burnt out.	⑪Overhaul (replace the damaged components).	
The pump's rotation is unstable.	①Problem with power supply voltage	①Set the power supply voltage to within ±10% of the rated voltage.	3.5
	②Defective wiring to the pump	②Perform wiring to the pump again.	3.4
	③Low ambient temperature has increased the oil viscosity.	③Increase the ambient temperature to 7℃ or more.	4.4
	④Foreign matter has entered the pump.	④Disassemble and clean the pump to eliminate foreign matter.	
The pressure does not decrease.	①The pump is too small for the volume of the vacuum chamber.	①Select another pump.	5.2
	②The pressure measurement method is not correct.	②Measure the pressure correctly.	5.1
	③The vacuum gauge is not suitable.	③Measure with a calibrated vacuum gauge suitable for the pressure range.	
	④The pipe connected to the inlet port is small, or the piping distance is long.	④Use pipes having a diameter larger than the inlet port diameter, or reduce the distance from the vacuum chamber.	5.1
	⑤The wire mesh at the inlet port is clogged.	⑤Remove the piping from the upper section of the inlet port, and clean the wire mesh.	6.2

Problem	Cause	Measures	Reference
The pressure does not decrease.	⑥The specified amount of oil has not been added.	⑥Add the specified amount of oil.	3.2
	⑦The oil has deteriorated.	⑦Replace the oil.	6.3
	⑧Leakage occurs from the pipe connected to the pump.	⑧Locate the leakage with a leakage detector and stop the leakage.	
	⑨Our specified oil is not being used.	⑨Overhaul the pump and replace with oil specified by us	6.3
	⑩Oil does not circulate, or the oil hole of the cover is clogged.	⑩Overhaul and clean the oil hole.	6.5
Abnormal sound is generated.	①Problem with power supply voltage	①Set the power supply voltage to within ±10% of the rated voltage.	3.5
	②The motor malfunctions.	②Replace the motor.	
	③Foreign matter has entered the pump.	③Eliminate the foreign matter and overhaul the pump.	
	④The specified amount of oil has not been added.	④Add the specified amount of oil.	3.2
	⑤The coupling spider malfunctions.	⑤Replace the coupling spider.	6.4
	⑥Oil does not circulate, or the oil hole of the cover is clogged.	⑥Overhaul and clean the oil hole.	6.5
	⑦Components inside the pump have burnt out.	⑦Overhaul (replace the damaged components).	
Pump surfaces are extremely hot (50 °C or more higher than the room temperature)	①Continuous operation at high evacuation pressure	①If continuous operation is performed at a high evacuation pressure, the pump surface temperature reaches 80℃. However, this is not a serious problem.	
	②The specified amount of oil has not been added. (If the oil amount is not sufficient, the cooling effect of the pump will be reduced.)	②Add the specified amount of oil.	3.2
	③The temperature of the evacuated gas is high.	③Mount cooling equipment such as a gas cooler at the inlet side.	
	④Oil does not circulate, or the oil hole of the cover is clogged.	④Overhaul and clean the oil hole.	6.5
A lot of oil splashes out from the outlet port.	①The pump is been filled in excess of the specified amount.	①Discharge the oil until it reduces to the specified amount.	3.2
	②Continuous operation is performed at a high evacuation pressure.	②Install an oil mist trap at the outlet side.	4.7
The oil leaks outside the pump.	①Deterioration of the O-ring and the oil seal of the case and cover	①Check and replace the O-ring and oil seal.	6.2

7. Disposal

Follow state law and local government regulations for disposal of the pump.

⚠ Caution

① In case a harmful toxic gas has been exhausted by accident, ask a specialist for waste disposal. Not only the pump itself but also the pump oil become toxic.

② For the disposal of pump oil, follow the instructions given under "Cautions for disposal" in "Material Safety Data Sheet."

8. Warranty

(1) The warranty for this pump is valid for a period of one year after shipment from the factory.

(2) Malfunctions which occur during the period of the warranty will be repaired free of charge provided that the pump is used under the correct service conditions shown below:

a) Ambient temperature and humidity: 7 ～ 40℃, 85% RH or less

b) Type and temperature of the exhausted gas: Dry air or dry nitrogen, 7 ～ 40℃

c) Operation in accordance with the instruction manual

(3) Even during the warranty period, the following are not included within the scope of free of charge repairs.

a) Malfunctions due to acts of God such as natural disasters and fire.

b) Malfunctions due to the pump being used in specific atmospheric conditions including damage from salt water and pollution

c) Malfunctions due to the conditions of service not conforming to those described in the operation manual (specification, maintenance and inspection).

d) Malfunctions due to modification or repair by personnel other than those employed by the manufacturer or service companies

e) Replacement of consumables.

f) Malfunctions which occur under conditions of service which are judged to be unsuitable for this vacuum pump by the technical personnel of the manufacture

This warranty applies to the oil sealed rotary vacuum pump itself and does not cover losses due to malfunctions in the pump.

The scope of our warranty and responsibility for products are limited to the repair and replacement of components.

A guarantee is effective only in Japan.

9. Main Components Replaced during Overhaul

9.1 Main replaceable components list

Table 6 Main replaceable components list

Location		No.	Cord No.	Product name	Standard size	Material	Q'ty
Coupling	All types	1	00099167	Spider (Tsukiboshi)	Mark II, for M63	NBR	1
Oil seal housing	All types	2	00093010	Oil seal	(NOK) HTC17-40-9	NBR	1
		3	00092050	O-ring	(NOK) S-45	NBR	1
Casing	All types	4	00092015	O-ring	(NOK) S-10	NBR	1
		5	00092040	O-ring	(NOK) S-30	NBR	1
		6	00092217	O-ring	JIS B 2401 P-12	NBR	1
		7	00092241	O-ring	JIS B 2401 P-35	NBR	1
		8	00092521	O-ring	JIS B 2401 V-175	NBR	1
Inlet pipe	All types	9	12950061	Inlet filter	φ22×t1.0	SUS	1
		10	00092623	O-ring	JIS B 8365 N-28	NBR	1
1st intermediate cover	All types	11	00093118	Oil seal	(NOK) SC17-30-7	NBR	1
		12	00092040	O-ring	(NOK) S-30	NBR	1
		13	00092068	O-ring	(NOK) S-70	NBR	1
		14	00092405	O-ring	JIS B 2401 G-55	NBR	1
Rotor	All types	15	13090061	Vane spring 136 ... 5 pieces 201 ... 7 pieces	φ2.6×31	SUS	-
	136	16		1st vane	45×30×t6	B-452	2
	201	17		1st vane	73×30×t6	B-452	2
	All types	18		2nd vane	20×30×t6	B-452	2
Cylinder	All types	19	00092024	O-ring	(NOK) S-16	NBR	1
		20	00092068	O-ring	(NOK) S-70	NBR	2
		21	12140061	Outlet valve 136 ... 2 pieces 201 ... 4 pieces	φ13×φ9.5×9	FPM	-
		22	11990061	Outlet valve spring 136 ... 2 pieces 201 ... 4 pieces	φ10×20	SUS	-
2nd intermediate cover	All types	23	00093118	Oil seal	(NOK) SC17-30-7	NBR	1
		24	00092024	O-ring	(NOK) S-16	NBR	1
		25	00092068	O-ring	(NOK) S-70	NBR	1
Side cover	All types	26	00093116	Oil seal	(NOK) SC15-30-7	NBR	1
		27	00092018	O-ring	(NOK) S-12	NBR	1
		28	11740061	Check valve	φ4×φ8×5	FPM	2
		29	11790066	Check valve spring	φ5×9	SUS	2
Front cover	All types	30	12740062	Oil level gauge	φ70×t7	Glass	1
		31	12740061	Level gauge gasket	φ60×φ70×t1	#6500	1
		32	00092217	O-ring	JIS B 2401 P-12	NBR	1
		33	00092028	O-ring	(NOK) S-20	NBR	1
		34	00092701	O-ring	(NOK) JAS03056	NBR	1

Note 1: Screws are all metric screws conforming to the ISO standard.

Note 2: For the relationship between components, see the assembly drawing.

9.2 Disassembly drawing

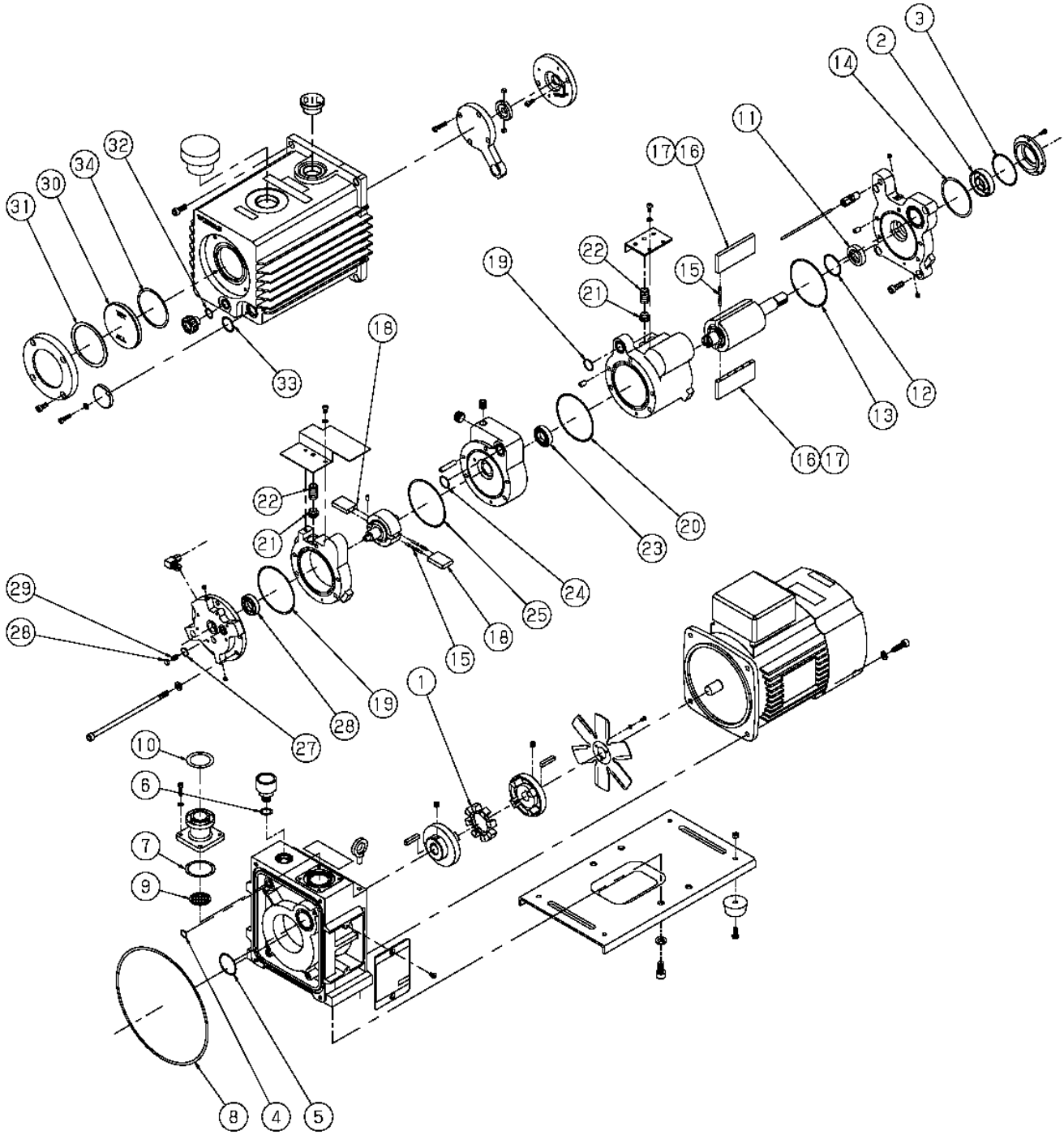

Fig. 11 Disassembly drawing of GLD-136A/201A oil sealed rotary vacuum pump

(Attached paper) Material Safety Data Sheet (MSDS)

The chemical material, which is applied or possible to contact when operating this pump are described. Read this manual carefully to understand characteristics of the chemical material (vacuum pump oil) which is described on MSDS sheet. When applying other vacuum pump oils besides the description in this manual, contact your local ULVAC SINKU-KIKO Co., LTD Sales and Service Center.

CAUTION

MSDS presents the reference information of hazardous chemical material to keep safety precautions. When handling the pump oil, it is necessary to take proper and practical treatments which are adapted handling the oil. After understanding the above mention, these treatments must be done. Therefore, MSDS is a not safety warranty.

Attached Table Material Safety Data Sheet Vacuum Pump Oil SMR-100

Section Ⅰ- Hazardous Ingredients/ Identity Information				
Hazardous Components (Specific Chemical Identity; Common Name(S))	OSHA PEL	ACGIH TLV	Other Limits Recommended	%(optional)
*Mineral oil(Highly-refined oil)	n/e	n/e	n/e	100%
(*Hazardous Components) (n/e = not established)				

Section Ⅱ- Physical/ Chemical Characteristics			
Boiling Point (°C/ mmHg)	165°C/0.1mmHg 165°C/13Pa	Specific Gravity (H_2O=1)	0.88(15/4°C)
Vapor Pressure (mmHg/°C)	1.0×10^{-4}mmHg/50°C 1.3×10^{-2}/50	Pour Point (°C)	-15.0°Cmax.
Vapor Density (Air=1)	>1	Evaporation Rate (Butyl Acetate=1)	<1
Solubility in Water	Negligible		
Appearance and Odor	Light yellow, viscous liquid with slight oily odor		

Section Ⅲ- Fire and Explosion Hazard Data			
Flash Point(Method Used)	(°C) 200min. (COC)	Flammable Limits	LEL UEL 1.0%
Extinguishing Media	Dry chemical, CO_2, Foam		

Special Fire Fighting Procedures Fire fighters or others exposed to products of combustion should wear protective clothing including self-containing breathing apparatus.			
Usual Fire and Explosion Hazard None			
Section Ⅳ- Reactivity Data			
Stability	Unstable		Condition to Avoid
	Stable	×	High temperature exceeding 100°C in storing
Incompatibility (Materials to Avoid)			Strong oxidizing agents.
Hazardous Decomposition or Byproducts			none
Hazardous Polymerization	May occur		Condition to Avoid.
	Will not occur	×	High temperature exceeding 100°C in storing
Section Ⅴ- Health Hazard Data			
Route(s) of Entry:	Inhalation? No	Skin? Yes(Slightly)	Ingestion? Unlikely
Health Hazards(Acute and Chronic) Acute Oral Toxicity; No information Skin irritation ; Mildly irritating Eye irritation ; Mildly irritating			
Carcinogen city:	NTP ? Not listed	IARC Monographs? Group 3	OSHA Regulated? Not regulated
Signs and Symptoms of Exposure None normally encountered.			
Medical Conditions Generally Aggravated by Exposure Unknown			
Emergency First Aid Procedures Skin : Wash with mild soap and water. If irritation persists, seek medical attention. Eye : Immediately flush eyes with plenty of water for at least 15 minutes. If irritation persists, get medical attention. Inhalation : Remove to outside air. Ingestion : Do not induce vomiting. Get medical attention.			

Section VI- Precautions for Safe Handling and use

Steps to Be Taken in Case Material is Released or Spilled

Eliminate ignition sources.

Remove free liquid into an empty container. Use suitable absorbents for the un-recovered fluid.

In case of a large amount of leak or spill, lead the flow of the liquid to a safety place by means of banking with sand or any other appropriate materials. Then recover it.

Waste Disposal Method

Dispose the waste according to federal, state and local regulations.

Precautions to Be Taken in Handling and Storing

Use with adequate ventilation.

Wear safety gloves and glasses.

Store indoors and close tightly with cap.

Keep the storage temperature in the range from 0°C to 40°C.

Keep away from heat, open flame, sparks and other possible ignition sources.

Prevent accumulation of static electricity.

Keep away from halogens, strong acids, alkaline agents and oxidizing agents, and do not store the product in the same place.

Other Precautions

Avoid contact with eyes, skin and clothing.

Section VII- Control Measures

Respiratory Protection (Specific Type)

Not normally required.

Ventilation	Local Exhaust Not normally required.	Special None
	Mechanical (General) Recommended.	Other None

Protective Gloves Rubber	Eye Protection Goggles

Other Protective Clothing or Equipment

None

Work/ Hygienic Practices

Wash hands thoroughly after handling.

Pump Usage Check Sheet (For operation manual)

(Use this sheet for request for an overhaul.)

Enter the following information required for safety purposes by the repair technician, and send it together with the pump to be repaired.

Date (yy/mm/dd): _____

Customer name: _____

Person in charge: _____

Telephone: _____ Extension: _____

Company from which pump was purchased: _____

Person in charge: _____

Telephone: _____ Extension: _____

Model: _____ Serial No.: _____

1. Reasons for requesting repair (Select from below.)
   - ☐ Malfunction
     Condition ☐ Abnormal noises ☐ Pressure problems ☐ Operation problems
     ☐ Other
   - ☐ Periodic checks and repairs
   - ☐ Other

2. Gases evacuated with pump
   (1) Toxic gases ☐ Yes ☐ No
   (2) Type and name of gases _____

3. Duration of use Approx. hours
   ☐ 24 hr continuous operation ☐ Intermittent operation

4. Other _____
   _____

5. Details of request
   - ☐ Repair estimate please.
   - ☐ Repair immediately if the estimate is within budget _____
   - ☐ Other _____

Copy this sheet for use as required.

Your request for repair and inspection may be refused if this sheet is not included with the pump.

< ULVAC KIKO,Inc. >

Head office, sales division
2-7-19 Shin-yokohama, Kohoku-ku, Yokohama City, Kanagawa 222-8522
(3F Tenko Bldg. 50)
Tel: +81-45-474-2011 Fax: +81-45-474-2010

ULVAC

Inspection Certificate

Product: Oil sealed rotary vacuum pump
Model: GLD-136A
GLD-201A
Inspected by: